Cambridge Assessment International Education

Cambridge International AS & A Level

CANDIDATE NAME

CENTRE NUMBER

CANDIDATE NUMBER

0283875667

PHYSICS **9702/53**

Paper 5 Planning, Analysis and Evaluation **May/June 2023**

1 hour 15 minutes

You must answer on the question paper.

No additional materials are needed.

INSTRUCTIONS

- Answer **all** questions.
- Use a black or dark blue pen. You may use an HB pencil for any diagrams or graphs.
- Write your name, centre number and candidate number in the boxes at the top of the page.
- Write your answer to each question in the space provided.
- Do **not** use an erasable pen or correction fluid.
- Do **not** write on any bar codes.
- You may use a calculator.
- You should show all your working and use appropriate units.

INFORMATION

- The total mark for this paper is 30.
- The number of marks for each question or part question is shown in brackets [ ].

This document has **8** pages.

© UCLES 2023

1 A wooden cube of mass A is placed on an inclined plane. The cube is attached to a cylinder of mass B using string that passes over a pulley, as shown in Fig. 1.1.

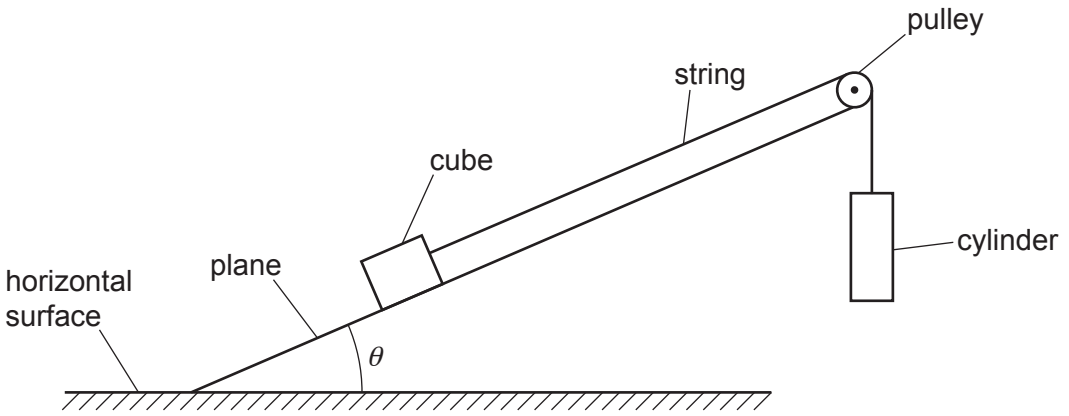

Fig. 1.1 (not to scale)

The angle between the plane and the horizontal surface is θ. Initially the cylinder is held at rest.

The cylinder is released. The time for the cylinder to fall a distance d is t.

It is suggested that t is related to θ by the relationship

$$\frac{2d}{t^2} = \frac{AH \sin\theta}{(A + B)} - \frac{KA}{(A + B)}$$

where H and K are constants.

Plan a laboratory experiment to test the relationship between t and θ.

Draw a diagram showing the arrangement of your equipment.

Explain how the results could be used to determine values for H and K.

In your plan you should include:

- the procedure to be followed
- the measurements to be taken
- the control of variables
- the analysis of the data
- any safety precautions to be taken.

© UCLES 2023

Diagram

.....

.....

.....

.....

.....

.....

.....

.....

.....

.....

.....

.....

.....

.....

.....

.....

2 A student investigates the discharge of capacitors in the circuit shown in Fig. 2.1.

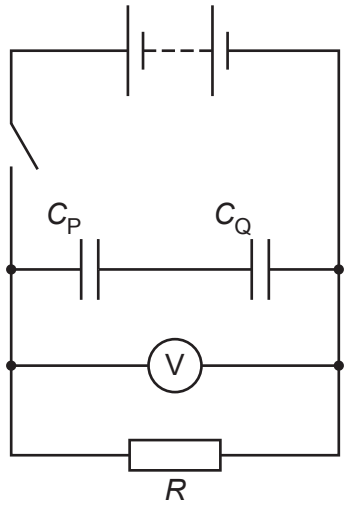

Fig. 2.1

The capacitors have capacitances C_P and C_Q.

The student closes the switch to charge the capacitors and then records the maximum reading V_0 on the voltmeter.

The switch is opened and a stop-watch is started. The capacitors discharge through the resistor and the reading on the voltmeter decreases. When the reading on the voltmeter is V the time t is recorded. The discharge of the capacitors is repeated and the mean time T is calculated.

The experiment is repeated for different values of C_P and C_Q.

For each combination of C_P and C_Q, the combined capacitance C is calculated.

It is suggested that C and T are related by the equation

$$\ln\left(\frac{V}{V_0}\right) = -\frac{T}{CR}$$

where R is the resistance of the resistor.

(a) A graph is plotted of T on the y-axis against C on the x-axis.

Determine an expression for the gradient.

gradient = ... [1]

(b) Values of C_P, C_Q and t are given in Table 2.1.

Table 2.1

$C_P / 10^{-4}$ F	$C_Q / 10^{-4}$ F	$C / 10^{-4}$ F	t/s	t/s	T/s
2.2	1.5		12.9	14.5	
2.2	3.3		21.1	19.7	
2.2	5.6		23.7	24.9	
3.3	1.5		15.3	16.9	
5.6	1.5		19.0	17.6	
5.6	3.3		30.9	32.1	

The relationship between C, C_P and C_Q is

$$C = \frac{C_P C_Q}{C_P + C_Q}.$$

Calculate and record values of $C / 10^{-4}$ F and T/s in Table 2.1.
Include the absolute uncertainties in T. [2]

(c) (i) Plot a graph of T/s against $C / 10^{-4}$ F.
Include error bars for T. [2]

(ii) Draw the straight line of best fit and a worst acceptable straight line on your graph. Label both lines. [2]

(iii) Determine the gradient of the line of best fit. Include the absolute uncertainty in your answer.

gradient = ... [2]

© UCLES 2023

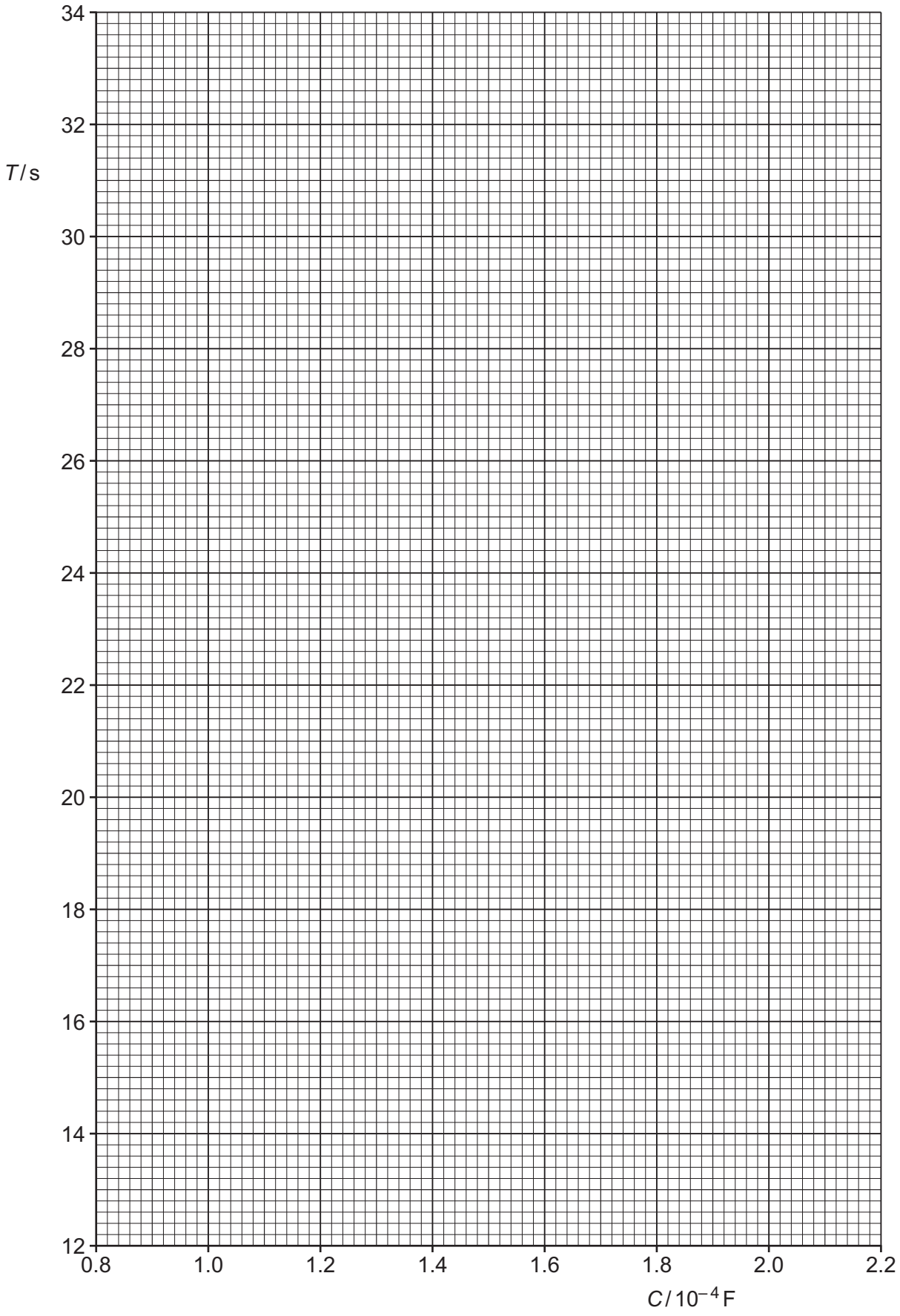
34
32
T / s
30
28
26
24
22
20
18
16
14
12
0.8
1.0
1.2
1.4
1.6
1.8
2.0
2.2
C / 10−4 F

(d) The values of V_0 and V are:

$V_0 = (4.8 \pm 0.1)\,\text{V}$

$V = (2.4 \pm 0.1)\,\text{V}$.

Calculate $\ln\left(\frac{V}{V_0}\right)$. Include the absolute uncertainty in $\ln\left(\frac{V}{V_0}\right)$.

$\ln\left(\frac{V}{V_0}\right)$ = ... [1]

(e) **(i)** Using your answers to **(a)**, **(c)(iii)** and **(d)**, determine the value of R. Include an appropriate unit.

R = ... [2]

(ii) Determine the percentage uncertainty in R.

percentage uncertainty in R = ...% [1]

(f) The experiment is repeated. Determine the value of C that gives a value of T of 60.0 s. Include the absolute uncertainty in your answer.

C = ... F [2]

[Total: 15]

To avoid the issue of disclosure of answer-related information to candidates, all copyright acknowledgements are reproduced online in the Cambridge Assessment International Education Copyright Acknowledgements Booklet. This is produced for each series of examinations and is freely available to download at www.cambridgeinternational.org after the live examination series.

© UCLES 2023